Sindoh
Unmistakable

D200 Series

USER MANUAL
Introduction

- Before using this Product, please read the USER MANUAL carefully and keep it for your reference.

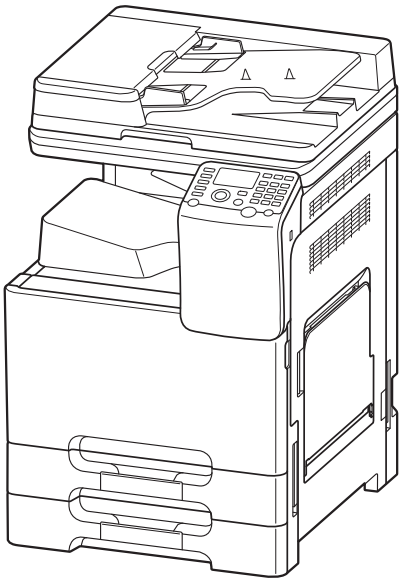

Guidelines for Safe Use

USERS MUST KEEP THE FOLLOWINGS WHEN USING THE MACHINE:

⚠ WARNING : Negligence of the instructions may cause death or serious injury:

- Plug the power cord into the wall socket directly. Do not use a extension cord.
- If the power cable or plug is worn out or damaged, pull the power plug out.
- Do not remove the cover or bolt except specified on this USER MANUAL to prevent from being exposed to electric shock or laser radiation (if a laser application is used).
- Under the following conditions, turn the power switch to ON position and then pull the power plug out:
  - Something is spilled on the Machine;
  - Service or repair request for the Machine is under consideration; or
  - The cover for the Machine is damaged.
- For the Machine with toner, do not burn the spilled toner or waste toner. If toner particles are exposed to flames, it may ignite.
- For discarding the Machine, use our designated shops or proper pickup places.
- If not used in long time or when the business is closed at quitting time, turn the power switch to OFF position. Otherwise, it may be a cause of flash fire.

⚠ CAUTION : Negligence of the instructions may cause slight injury or loss of property.

- Protect the Machine against moist or wet place with rain or snow.
- Before moving the Machine, pull the power cord out of the wall socket. Pay attention to the power cord not to be damaged while moving the Machine.
- When pull the power cord out of the wall, do not pull the cable but give a pull to the plug.
- Do not drop clip, staple, or small-sized metal object into the Machine inside.
- When controlling the Machine Inside for the purpose of removing paper jam or cleaning the Machine inside cleaning, pay attention to negligent accident.
- For the Machine with toner, keep the toner and toner bottle out of the reach of children.
- Do not discard the Machine or the consumables in the household waste disposal site. In discarding the Machine, make use of our designated shops or proper pickup places.
- The Machine inside may be very hot. Never touch the component with “CAUTION: High Temperature” or around. If not, it may cause a burn.
  Our Product conforms to the standard of high quality and performance.
- We recommend you to use honest components available for buying from our designated shops.

Before Using the Product

Thank you very much for your buying the SINDOH's Product.
This USER MANUAL specifies the right way to use the Machine and simple repairing in detail to maintain it in optimal state at all times and to contribute to your company's office rationalization and efficiency.
Please read the USER MANUAL carefully and keep it close at head, before using this product. Before using the Machine, read the Guidelines for Safety Use to use the Machine sefely and correctly.

Prohibition and Restriction of Reproduction

1. The content of this USER MANUAL is subject to change without prior notice.
   We disclaim all responsibility for any direct/indirect loss due to your handling this machine or the operation results or for any damage caused by misuse.

2. Copying or printing paper money in circulation, banknote, revenue stamp, bond, stock, bank bill, check, passport, or driver's license is forbidden by the laws.

3. The works such as copyright book, music, picture, map, drawing, or photograph can be used by copying it for personal or family use or within the corresponding scope, but other uses are forbidden by the laws.

4. The above contents in this paragraph are part of legislation and they are not the reprinting from the legislation. We disclaim all the responsibility for the accuracy or integrity. For the legality of a copy or print, we suggest you get legal advice.

Table of Contents

Chapter 1. Introduction

1. **Welcome** ---------- *1-2*

2. **User's Guides** ---------- *1-3*
   - Booklet manuals ---------- *1-3*
   - User's guides included in User Manual CD ---------- *1-3*

3. **Notations and symbols used in this manual** ---------- *1-4*
   - Procedural instruction ---------- *1-4*
   - Symbols used in this manual ---------- *1-4*
   - Product and key names ---------- *1-5*

4. **Original and Paper Indications** ---------- *1-6*
   - Original and paper sizes ---------- *1-6*
   - Original and paper indications ---------- *1-6*

Chapter 2. About This Machine

1. **Checking the name of each part** ---------- *2-2*
   - Name of each part ---------- *2-2*
   - Front side ---------- *2-2*
   - Rear side ---------- *2-5*

2. **Checking the option configuration** ---------- *2-6*
   - List of optional components ---------- *2-6*

Chapter 3. Turning the Power On or Off

1. **About power supply** ---------- *3-2*

2. **Turning the Power Switch ON or OFF** ---------- *3-3*

3. Using the Power key ---------- 3-4

Chapter 4. Loading the Original

1. Loading the original into the ADF ---------- 4-2
Original available for ADF ---------- 4-2
Loading the original into the ADF ---------- 4-3

2. Loading the original onto the Original Glass ---------- 4-4
Original available on the Original Glass ---------- 4-4
Loading the original onto the Original Glass ---------- 4-4

Chapter 5. Loading Paper

1. Paper ---------- 5-2
- Checking the available paper types ---------- 5-2
- Checking the available paper sizes ---------- 5-3
- Precautions for correct operations ---------- 5-5

Unavailable paper ---------- 5-5
Storing paper ---------- 5-6

2. Loading paper into the Manual Feed Tray ---------- 5-7
How to load paper into the Manual Feed Tray ---------- 5-7
Loading postcards ---------- 5-9
Loading envelopes ---------- 5-10

3. Loading Paper in Tray 1, Tray 2 ---------- 5-11

Chapter 6. About the Control Panel

1. Names and functions of Control Panel keys ---------- 6-2

2. Entering characters ---------- 6-5

Changing Input Mode ---------- 6-5
Key Operation ---------- 6-5

3. **About the Message Window display** ---------- *6-7*
- Main Screen (Copy Mode) ---------- 6-7
- Main Screen (Scan Mode) ---------- 6-8
- Main Screen (Fax Mode) ---------- 6-8

4. **REPORT/STATUS Menu** ---------- *6-9*
TOTAL PRINT ---------- 6-9
REPORT ---------- 6-10

Chapter 7. Login Screen

Logging in to this machine ---------- 7-2
Performing user authentication ---------- 7-2
Performing account track ---------- 7-3

Introduction

1

1. Welcome

Thank you for purchasing this machine.

To obtain maximum performance from this product and to learn how to use it effectively, please read this User's Guide as necessary.

2. User's Guides

Booklet manuals

Manual title	Overview
[Quick Start Guide]	This guide describes how to perform basic operations of this machine and configure initial settings. This manual also contains notes and precautions that should be followed in order to use this machine. Please be sure to read this manual before using this machine.

User's guides included in User Manual CD-ROM

Manual title	Overview
[User's Guide Introduction]	This guide contains information that is useful to know before beginning to operate this machine, such as the name of each part and how to turn the power on and off, use the Control Panel, and load an original or paper.
[User's Guide Print Operations]	This guide describes how to install the printer driver as well as basic usage and applications.
[User's Guide Copy Operations]	This guide describes various methods to make copies.
[User's Guide Scan Operations]	This guide describes scan transmission operations and necessary preparations. You can scan a paper document, convert it to digital data, and send the result to the computer or server.
[User's Guide Maintenance/ Troubleshooting]	This guide describes how to replace consumables, clean this machine, and perform troubleshooting.
[User's Guide Description of Utility Keys]	This guide describes Utility settings such as [User Settings] and [Admin Settings] for this machine.
[User's Guide Applied Functions]	This guide describes the special usages of this machine such as how to use Web Connection, manually install the printer driver, and configure print settings using Linux.

3. Notations and symbols used in this manual

Procedural instruction

√ This check mark symbol shows a precondition of a procedure.

1 This format number "1" represents the first step.

2 This format number represents the order of consecutive steps

➞ This symbol indicates a supplementary explanation of a procedural instruction.

Symbols used in this manual

⚠ Warning

– This symbol indicates that a failure to heed the instructions may lead to death or serious injury.

⚠ Caution

– This symbol indicates that a failure to heed the instructions may lead to mishandling that may cause injury or property damage.

– This symbol indicates a risk that may result in damage to this machine or documents. Follow the instructions to avoid property damage.

Note

– This symbol indicates supplemental information of a topic as well as options required to use a function.

– This symbol indicates supplemental information of a topic.

Reference

– This symbol indicates reference functions related to a topic.

❖ Related setting

This shows the settings related to a particular topic for any user.

❖ Related setting (for the administrator)

This shows the settings related to a topic only for administrators.

Product and key names

Notations used in this manual	Description
[ ]	An item enclosed in brackets [ ] indicates a key name on the Message Window or computer screen, or the name of a user's guide.
Bold text	This presents a key name, part name, product name, or option name on the Control Panel.

4. Original and Paper Indications

Original and paper sizes

The following explains the indication for originals and paper described in this manual.

When indicating the original or paper size, the Y side represents the width and the X side represents the length.

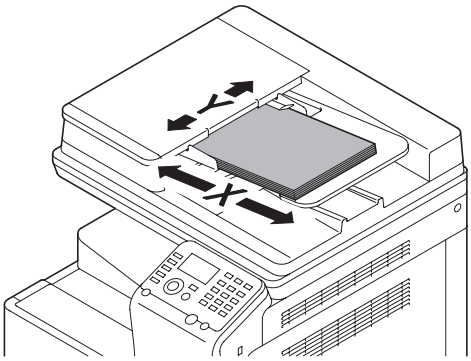

Original and paper indications

indicates the paper size with the length (X) being longer than the width (Y).

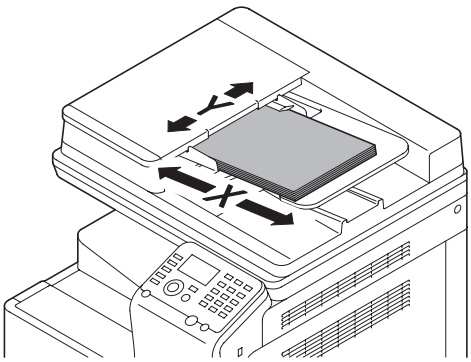

indicates the paper size with the length (X) being shorter than the width (Y).

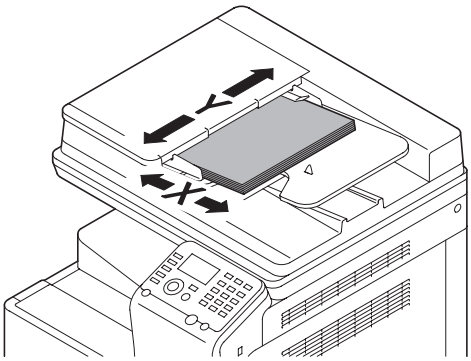

About This Machine

2

1. Checking the name of each part

Name of each part

Front side

The illustration shows the main unit with optional **Reverse Automatic Document Feeder D200RDF** and **Table D200TB(E)** installed.

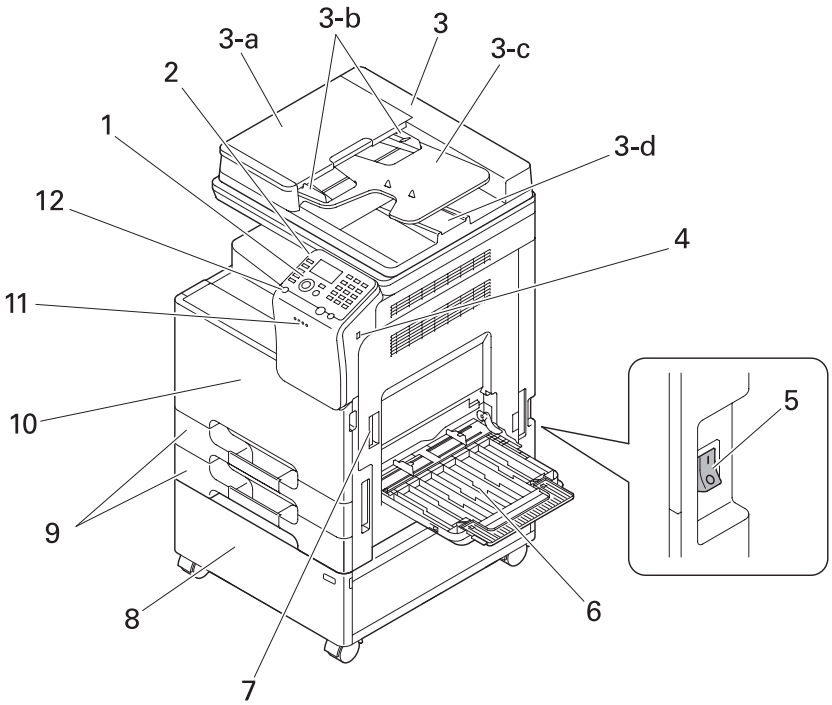

No.	Name	No.	Name
1	**Control Panel**	5	**Power Switch**
2	**Warning Indicator**	6	**Manual Feed Tray**
3	**Reverse Automatic Document Feeder(RADF)**	7	**Right Door Release Lever**
3-a	**ADF Feed Cover**	8	**Table**
3-b	**Document Guide**	9	**Tray1, Tray2**
3-c	**Document Feed Tray**	10	**Front Cover**
3-d	**Document Output Tray**	11	**Data Indicator**
4	**USB Host Port**	12	**Power key**

View with Reverse Automatic Document Feeder (RADF) opened

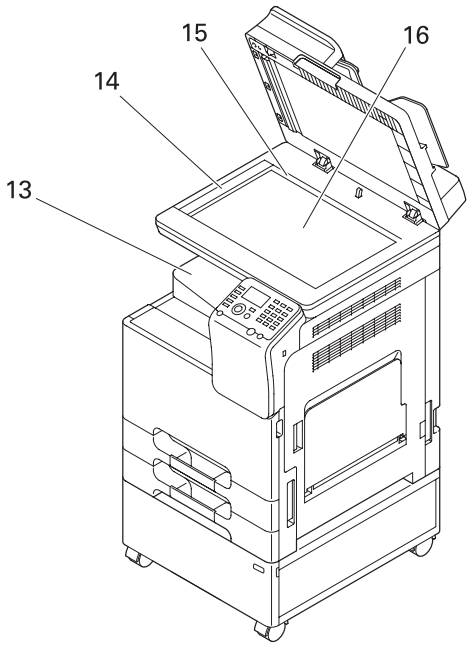

No.	Name	No.	Name
13	**Output Tray**	15	**Original Size Scale**
14	**Slit Scan Glass**	16	**Original Glass**

iew with Front Cover and Right Door opened

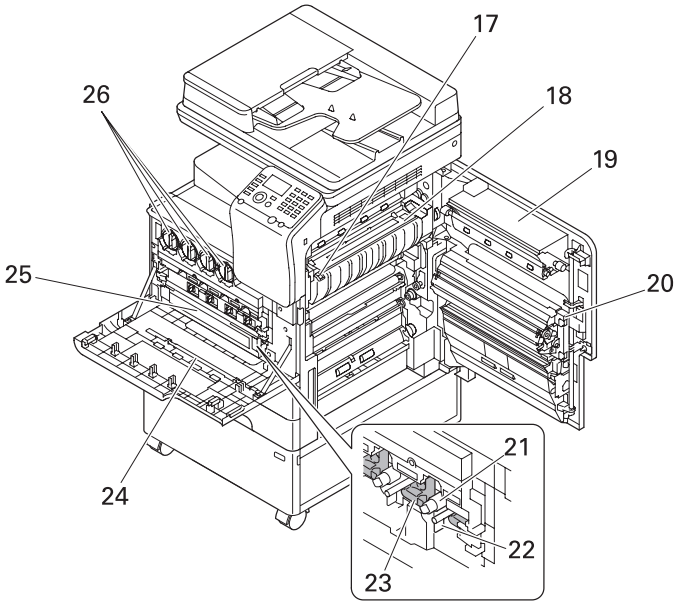

No.	Name	No.	Name
17	**Fusing Unit Cover Lever**	22	**Charger Cleaner**
18	**Fusing Unit**	23	**Lock Release Tab**
19	**Right Door**	24	**Printhead Cleaner**
20	**Auto Duplex Unit (D201/D202 only)**	25	**Waste Toner Box**
21	**Drum Unit**	26	**Toner Cartridge**

Rear side

The illustration shows the main unit with optional **Reverse Automatic Document Feeder D200RDF, Table D200TB(E), Fax Kit D202FKT**, and **Fax Mount Kit D200FKTM** installed.

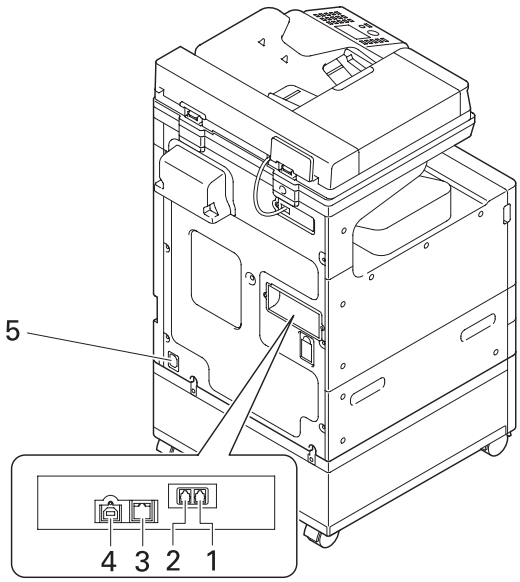

No.	Name
1	**LINE (telephone line) Jack**
2	**TEL (telephone) Jack**
3	**Ethernet port (1000Base-T/100Base-TX/10Base-T)**
4	**USB Port (Type B)**
5	**Power Connection**

2. Checking the option configuration

List of optional components

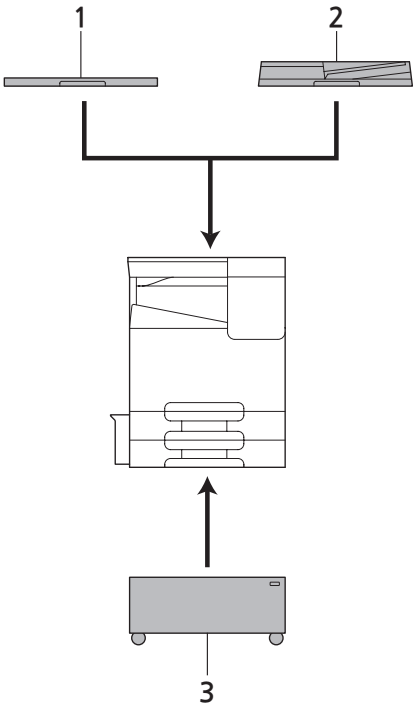

No.	Name	Description
1	**Original Cover D200PCV**	Used to fix the loaded originals.
2	**Reverse Automatic Document Feeder D200RDF**	Automatically feeds and scans originals by page. This unit also reverses and automatically scans 2-sided originals.
3	**Table D200TB(E)**	Used to install this machine on the floor.

The following optional components are built into this machine and are not shown in the figure above.

No.	Name	Descriptionv
4	**Fax Kit D202FKT**	Used to operate this machine as a fax machine.
5	**Fax Mount Kit D200FKTM**	This unit is required to install the Fax Kit.

Turning the Power On or Off

3

1. About power supply

This machine has two power switches: Power Switch outside the machine and Power key on the Control Panel.

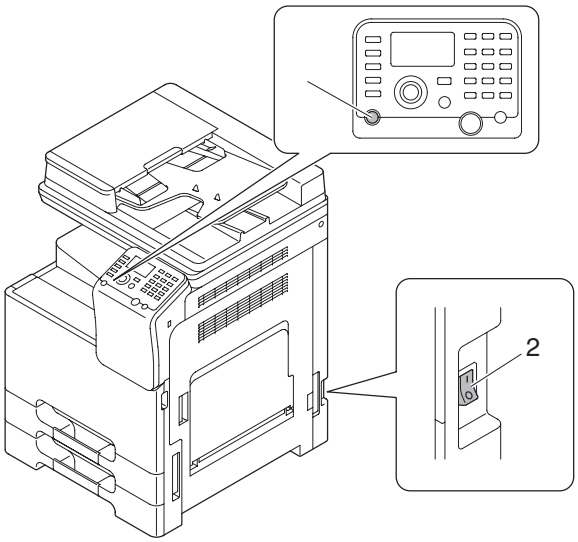

No.	Name	Description
1	Power key	Press this key to switch this machine to Power Save mode. This function reduces power consumption and has more significant power saving effect. For details, refer to P. 3-4.
2	Power Switch	Press this switch when turning the main power of this machine on or off, or when restarting this machine.

⚠ Caution

- While printing, do not turn the Power Switch off. Otherwise, it may lead to a paper jam. If the Power Switch is turned off while this machine is running, the system deletes the currently loaded data or communicating data as well as queued jobs.

2. Turning the Power Switch ON or OFF

1 Connect the Power Cord to this machine.

2 Connect the Power Cord to the power outlet.

3 When turning the main power on, press | of the Power Switch.

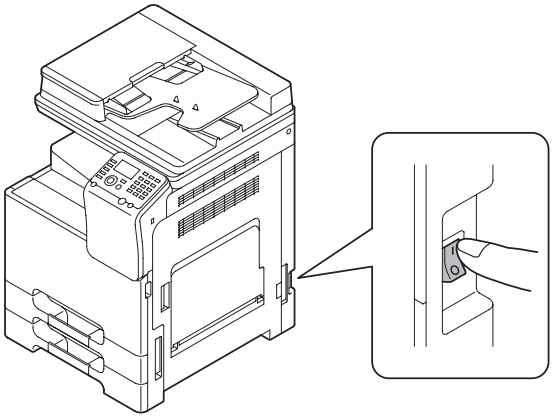

A screen appears to show that this machine is in the process of start-up. When the main screen is displayed, this machine is ready to use.

4 When turning the main power off, press ○ of the Power Switch.

⚠ Caution

- When restarting this machine, turn the Power Switch off and on again after 10 or more seconds have elapsed. Not doing so may result in an operation failure.

❖ Related setting (for the administrator)

The mode to be displayed initially when the main power is switched ON can be selected.
To configure settings: Utility key – [Admin Settings] – [System Settings] – [Reset Settings] – [System auto reset] – [Priority Mode] (Default: [Copy])

3. Using the Power key

Press the Power key to switch this machine to Power Save mode.

When the Power key is pressed, the status of this machine changes as shown below. Depending on how long the Power key is pressed, the state of Power Save mode to be activated will differ.

Power key	Status of this machine	Status of LED	Description
Short press	Low Power mode (Default)	Flash: Blue	The back light of the Message Window is turned off to limit the power consumption. This machine returns to Normal mode when it receives data or faxes or when the user presses a key on the Control Panel.
	Sleep mode	Flash: Blue	Provides a greater power saving effect than Low Power mode. The time required to return to Normal mode is longer than that from Low Power mode. This machine returns to the Normal mode when original is set up in ADF or when the user presses a key on the Control Panel.
Hold down	Auto Power OFF mode	Flash: Orange	This function provides a more significant power saving effect than the Sleep mode, which is close to the state where the main power is turned off. In Auto Power OFF mode, this machine cannot receive data or faxes, and also it cannot scan or print an original. To enable the machine to return to Normal mode from the Auto Power OFF mode, press the Power key again.

❖ Related setting (for the administrator)

Press the Power key to select whether to switch to Low Power or Sleep mode.
To configure settings: Utility key – [Admin Settings] – [System Settings] – [Pwr Sup/Pwr Sav] – [Power Save Settings] (Default: [Low Power])

Loading the Original

4

1. Loading the original into the ADF

Original available for ADF

Item	Specifications	
Original types	1-Sided	Plain paper (9-5/16 lb to 34-1/16 lb (35 g/m^2 to 128 g/m^2))
	2-Sided	Plain paper (13-5/16 lb to 34-1/16 lb (50 g/m^2 to 128 g/m^2))
	Mixed original	Plain paper (13-5/16 lb to 34-1/16 lb (50 g/m^2 to 128 g/m^2))
Max. original size	A3 or Ledger (11 e 17) Fax only: 11-11/16 inches e 39-3/8 inches (297 mm × 1000 mm)	
Original loading capacity	Max. 70 sheets (21-1/4 lb (80 g/m^2))	

Do not load the following originals into the ADF. Doing so may cause an original paper jam, or damage the originals.

- Wrinkled, folded, curled, or torn originals
- Highly translucent or transparent originals, such as transparencies or diazo photosensitive paper
- Coated originals such as carbon-backed paper
- Original that is less than basic weight 9-5/16 lb (35 g/m^2) or greater than 34-1/16 lb (128 g/m^2)
- Originals that are bound, for example, with staples or paper clips
- Originals that are bound in booklet form
- Originals with pages bound together with glue
- Originals with pages that have had cutouts removed or that are cutouts
- Label sheets
- Offset printing masters
- Developing paper
- Glossy original such as gloss coated paper

Loading the original into the ADF

The ADF feeds original sheets one by one in order from the top, and automatically loads them. It also loads a 2-sided original automatically.

The ADF is helpful when loading a large number of original.

1 Put the first page of an original at the top, and load the original into the Document Feed Tray with the side to be photocopied facing upward.

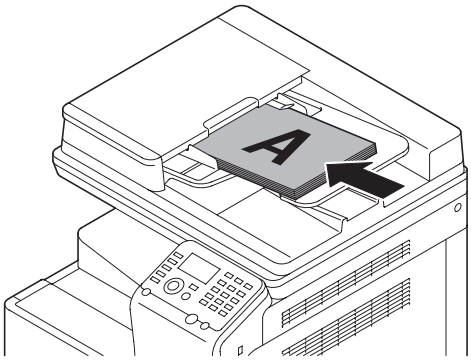

➞ Load the original so that its top side is placed at the back. When loading in a different orientation, be sure to specify the loading direction of originals.

⚠ Caution

- Do not load more than 70 sheets at a time into Document Feed Tray, and do not load the sheets up to the point where the top of the stack is higher than the ▼ mark. Doing so may cause the originals to jam, damage the originals and/or ADF failure.

2 Slide the Document Guide to fit the loaded original.

Note

- However, if the original contains more than 70 pages, it can be scanned separately. To use this function, contact your service representative.

2. Loading the original onto the Original Glass

Original available on the Original Glass

Item	Specifications
Original types	Sheets, books (two-page spread), cards, three-dimensional objects
Max. original size	A3 or Ledger (11×17)
Original loading capacity	Max. 4-7/16 lb (2 kg)

Loading the original onto the Original Glass

Using the Original Glass allows you to scan an original such as a book or card, which is not available in the ADF.

1 Open the ADF or Original Cover.

2 Load the original into the Original Glass with the side to be photocopied facing downward.

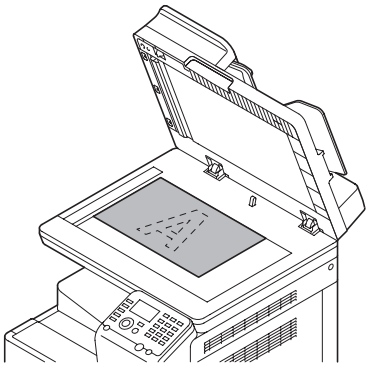

→ Place the top side of the original at the back, and align the original to the mark ◆ at the left rear of the Original Size Scale. When loading in a different orientation, be sure to specify the loading direction of originals.

→ When copying a highly transparent original such as transparencies or tracing paper, place a blank sheet that is the same size as the original on the original to enable clear scanning.

⚠ Caution

- Do not place an original heavier than 4-7/16 lb (2 kg) on the original glass. Furthermore, do not use excessive force to press down on a book or any other form of original that must be spread on the original glass. Otherwise, the machine may be damaged or a failure may occur.

3 Close the ADF or Original Cover.

Caution

– When placing a thick book or a three-dimensional object, you do not need to close the ADF or Original Cover to scan it. A bright light may be emitted through the Original Glass. Be careful not to look directly at it. Note, however, that the light coming through the original glass is not a laser beam, and will not expose the user to related hazards.

Note

– If you load the following size of original on the Original Glass, the original size is detected automatically.

- Inch area: 11×17, 8-1/2×14, 8-1/2 e 11, 5-1/2×8-1/2
- Metric area: A3, B4, A4, B5, A5, 8 e 13*, 16K, 8K

  * Foolscap provides six types: 8-1/2×13-1/2, 220 mm e 330 mm, 8-1/2×13, 8-1/4×13, 8-1/8×13-1/4, and 8×13. Any one of these sizes is selectable. For details, contact your service representative.

Loading Paper

5

1. Paper

Checking the available paper types

Paper type	Paper weight	Paper capacity
Plain paper Recycled paper Single Side Only[*1] Special Paper[*2] User Paper 1[*3] User Paper 2[*3]	15–15/16 lb to 23–15/16 lb (60 g/m² to 90 g/m²)	Manual Feed Tray: 150 sheets Tray 1, Tray2: 500 sheets
Thick 1 User Paper 3[*3]	24–3/16 lb to 31–15/16 lb (91 g/m² to 120 g/m²)	Manual Feed Tray: 20 sheets Tray 1, Tray2: 150 sheets
Thick 1+ User Paper 4[*3]	32–3/16 lb to 41–3/4 lb (121 g/m² to 157 g/m²)	Manual Feed Tray: 20 sheets Tray 1, Tray2: 150 sheets
Thick 2 User Paper 5[*3]	42 lb to 55–5/8 lb (158 g/m² to 209 g/m²)	Manual Feed Tray: 20 sheets Tray 1, Tray2: 150 sheets
Thick 3 User Paper 6[*3]	55–7/8 lb to 68–1/8 lb (210 g/m² to 256 g/m²)	Manual Feed Tray: 20 sheets Tray 1, Tray2: 150 sheets
Thick 4	68–3/8 lb to 79–13/16 lb (257 g/m² to 300 g/m²)	Manual Feed Tray: 20 sheets
Envelopes	–	Manual Feed Tray: 10 sheets
Label sheets	–	Manual Feed Tray: 20 sheets

*1 Paper on which you will not print on both sides (for example, when something is already printed on the front side).

*2 Fine and other special paper.

*3 Paper that is registered as a frequently used paper type.

⚠ Caution

– Paper other than plain paper is referred to as special paper. When loading special paper into the paper tray, specify the correct paper type. Otherwise, it may result in a paper jam or image error.

Note

- For paper weight and media adjustment settings, contact your service representative.
- When printing on the reverse side of a sheet printed on one side, load paper into the Manual Feed Tray, and select [Side2] in the paper setting, improving a reduction of the printing image quality. [Side2] is available when plain paper, recycled paper, Thick 1, Thick 1+, Thick 2, Thick 3, or Thick 4 is selected in the Manual Feed Tray.
- If Thick 3 or Thick 4 is selected for printing, resulting image quality may not be as expected.
- When loading Thick 4 in the paper tray, place A4 or 8-1/2×11 in the direction.
- On an envelope, it is only possible to print on the front (address) side. Also, the result of printing on the seal overlapping part on the front side cannot be assured. The area that cannot be assured varies depending on envelope types.

Checking the available paper sizes

Paper feed port	Allowable sizes
Manual Feed Tray	SRA3, A3, A4, A5, A6, B4, B5 (JIS), B6 12×18, Ledger (11×17), Legal (8-1/2×14), Letter (8-1/2×11), Executive (7-1/4×10-1/2), Statement/Invoice (5-1/2×8-1/2) Foolscap (8×13), 8-1/8×13-1/4, Folio (8-1/4×13), Government Legal (8-1/2×13), 8-1/2×13-1/2, 220 mm e 330 mm, 8K, 16K Photo Size 4 e 6 Width: 3-9/16 inches to 12-5/8 inches (90 mm to 320 mm), Length: 5-1/2 inch- es to 18 inches (139.7 mm to 457.2 mm)
Tray 1	A4, A5, B4, B5 (JIS) Legal (8-1/2×14), Letter (8-1/2×11) Foolscap (8×13), Folio (8-1/4×13), Government Legal (8-1/2×13), Statement/Invoice (5-1/2×8-1/2), 8-1/2×13-1/2, 16K
Tray 2	A3, A4, A5, B4, B5 (JIS) Ledger (11×17), Legal (8-1/2×14), Letter (8-1/2×11) Foolscap (8×13), Folio (8-1/4×13), Government legal (8-1/2×13), State- ment/Invoice (5-1/2×8-1/2), 8-1/2×13-1/2, 8K, 16K
Auto Duplex Unit (D202/D201 only)	SRA3, A3, A4, A5, A6, B4, B5 (JIS), B6 12 e 18, Ledger (11×17), Legal (8-1/2×14), Letter (8-1/2×11), Executive (7-1/4×10-1/2), Statement/Invoice (5-1/2×8-1/2) Foolscap (8×13), 8-1/8×13-1/4, Folio (8-1/4×13), Government Legal (8-1/2×13), 8-1/2×13-1/2, 220 mm×330 mm, 8K, 16K, Photo Size 4×6 Width: 5-1/2 inches to 12-5/8 inches (139.7 mm to 320 mm), Length: 5-13/16 inches to 18 inches (148 mm to 457.2 mm)

Note

- For all paper sizes, the areas excluding 3/16 inches (4.2 mm) from the paper edge for printing, 3/16 inches (4.2 mm) from the paper edge for copying and 1/8 inches (3 mm) from the paper edge for all other cases are judged to be printable areas. When configuring a user setting of the page size using the application, specify the paper size within the printable area so that the optimal result is obtained.
- The page margin setting is determined depending on your application. If the default paper size or margin is selected, there may be some part of the paper that is not able to be printed on. To obtain the optimal result, configure the custom setting so that an image is included in the printable area of this machine.
- Photo Size 4×6 may not be available depending on the sales area.

Precautions for correct operations

Unavailable paper

Do not load the following types of paper into the tray. Not observing these precautions may lead to reduced print quality, a paper jam, or machine damage.

- Paper that has been printed on using a heat-transfer printer or an inkjet printer
- Folded, curled, wrinkled, or torn paper
- Paper that has been left unwrapped for a long period of time
- Paper that is damp, perforated, or that has been hole punched
- Extremely smooth or extremely rough paper, or paper with an uneven surface
- Treated paper such as carbon-backed paper, thermal paper, pressure-sensitive paper, or iron-on transfer paper
- Paper that has been decorated with foil or embossing
- Paper of a non-standard shape (paper that is not rectangular)
- Paper that is bound with glue, staples or paper clips
- Paper with labels attached
- Paper with ribbons, hooks, buttons, etc., attached
- Paper with different paper quality (roughness) on the front and back sides
- Paper that is too thin or too thick
- Paper containing static electricity
- Acidic paper
- Other types of unavailable paper

Storing paper

To store paper, be sure to note the following points.

- Store paper on an even, horizontal surface, and do not take the paper out of its packaging until it is loaded into a tray. If paper is left for a long period of time outside its package, it may cause a paper jam.
- When not using paper that has been taken out of its package once, return it to the original package and store it in a horizontal, cool, dark place.
- Do not store paper in locations or in environments that are:
- Too humid
- Exposed to direct sunlight
- Subject to high temperatures (95°F (35℃) or more)
- Too dusty
- Do not set paper against the other or store it vertically.

Note

– When purchasing a large quantity of paper or special paper, carry out a trial print to check the printing quality in advance.

2. Loading paper into the Manual Feed Tray

How to load paper into the Manual Feed Tray

When selecting a paper size other than for paper trays, use the Manual Feed Tray.
To use the Manual Feed Tray, load paper and specify the paper type and paper size.

1 Open the Manual Feed Tray.

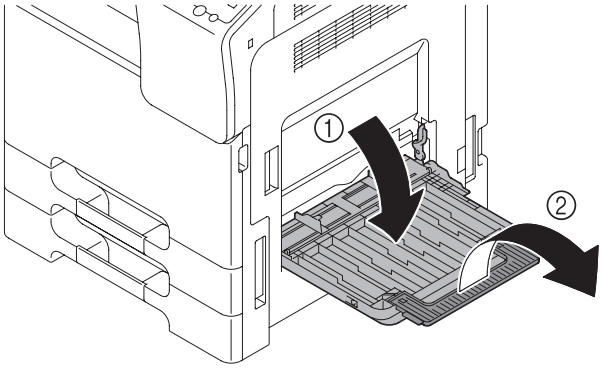

2 Spread out the paper guide.

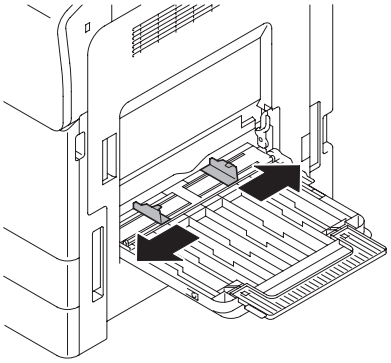

3 With the side to be printed on facing down, insert the paper as far as possible into the feed slot.

➞ For details on the available paper sizes, refer to P. 5-2.

➞ For details on how to load postcards, refer to P. 5-9.

➞ For details on how to load envelopes, refer to P. 5-10.

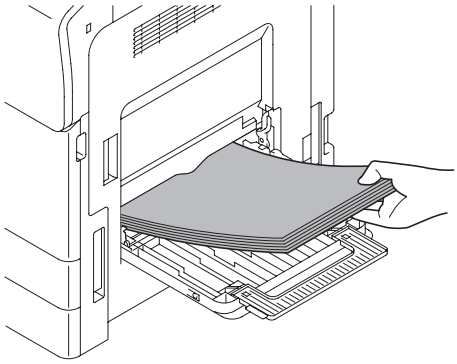

⚠ Caution

– Load paper within the guide indicating the upper limit.
  If paper is curled, flatten it before loading.

4 Align the paper guide to the paper size.

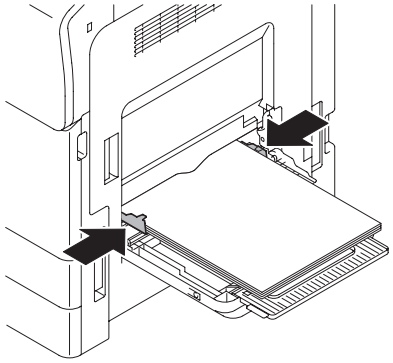

5 Lower the lever to raise the push up plate.

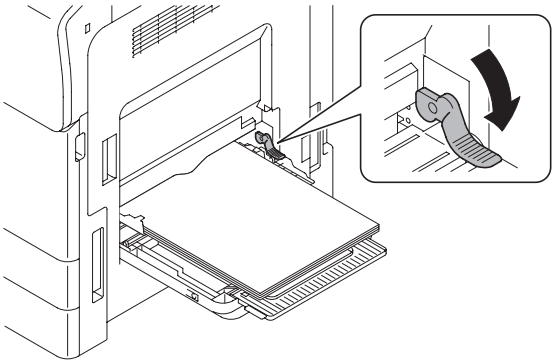

The paper setting screen is displayed in the Message Window of this machine.

6 Change the paper type and paper size on the Control Panel. When loading custom sized paper, also specify the paper size.

Loading postcards

Up to 20 postcards can be loaded into the tray at a time.

1 With the print side facing down, load a postcard as shown in the figure.

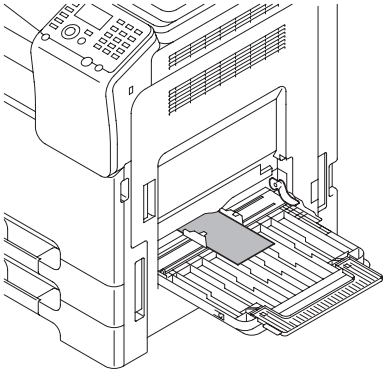

2 Align the paper guide to the paper size.

3 Lower the lever to raise the push up plate.
The paper setting screen is displayed in the Message Window of this machine.

4 Change the paper type and paper size on the Control Panel.

➞ If the size of the postcard set up is not found in the list of paper sizes, check the size of the postcard and then specify the size in [Custom].

⚠ Caution

– When printing data stored on a computer onto a postcard, use the [Basic] tab of the printer driver to configure settings. For details, refer to [User's Guide Print Operations].

Loading envelopes

Up to 10 envelopes can be loaded into the tray at a time.

⚠ Caution

- Before loading, remove air from the envelope(s), and securely press along the flap fold line. Otherwise, it will result in wrinkles or a paper jam.

1 Position so the flap part is facing up, and load an envelope as shown in the figure.

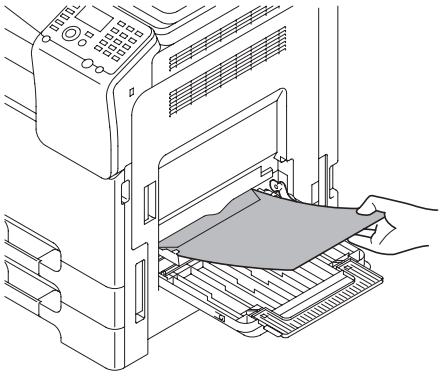

➞ When the flap is in the long side of an envelope, load the envelope so that its flap is placed at the back.

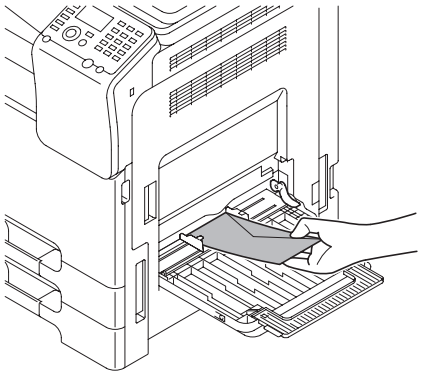

2 Align the paper guide to the paper size.

3 Lower the lever to raise the push up plate.
The paper setting screen is displayed in the Message Window of this machine.

4 Change the paper type and paper size on the Control Panel.

➞ If the size of the envelope set up is not found in the list of paper sizes, check the size of the envelope and then specify the size in [Custom].

3. Loading Paper in Tray 1, Tray 2

The procedure for loading paper is common between Tray 1 and Tray 2. The following explains how to load paper into Tray 1.

1 Pull out Tray 1.

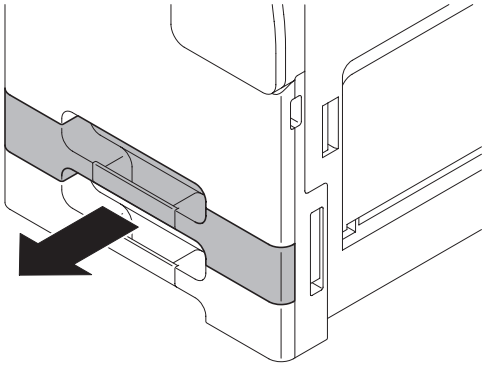

2 Slide the paper guide to fit the size of the loaded paper.

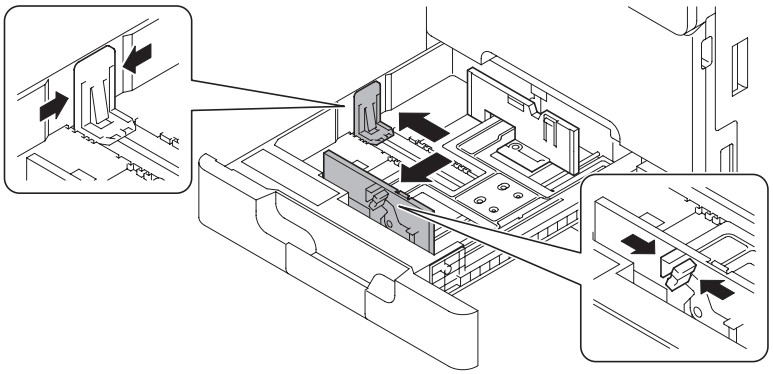

3 Load paper into the tray with the print side facing up.

➞ For details on the available paper sizes, refer to P. 5-2.

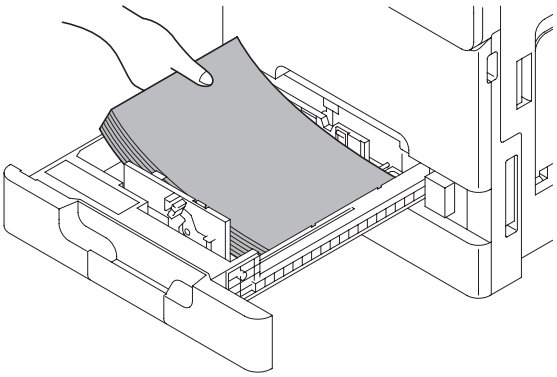

⚠ Caution

- Do not load the sheets up to the point where the top of the stack is higher than the ▼ mark. If paper is curled, flatten it before loading.

4 Align the paper guide to the paper size.

5 Close Tray 1.

6 Change the paper type on the Control Panel.

→ To configure settings: Utility key – [Paper Settings] – [TRAY1]

About the Control Panel

6

1. Names and functions of Control Panel keys

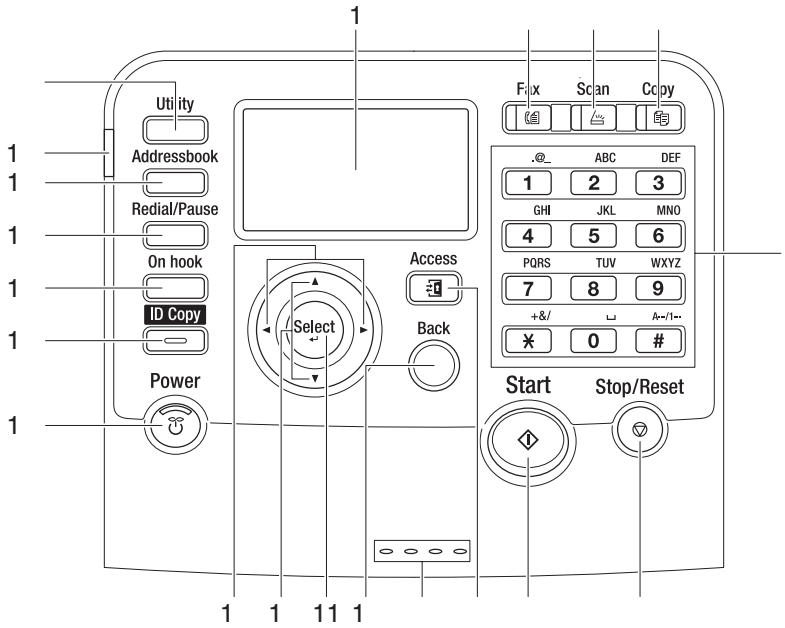

No.	Name	Description
1	Message Window	Displays setting screens and messages.
2	Fax/Fax LED	Press this key to enter Fax mode. The LED lights up in blue to indicate that the machine is in Fax mode. For details of the fax function, refer to [User's Guide Fax Operations] included in the optional Fax Mount Kit D200FKTM.
3	Scan/Scan LED	Press this key to enter Scan mode. (Scan to E-mail, Scan to FTP, Scan to a shared folder on a computer Scan to PC, or Scan to USB Memory) The LED lights up in blue to indicate that the machine is in Scan mode. For details of the scanner function, refer to [User's Guide Scanner Operations].
4	Copy/Copy LED	Press this key to enter Copy mode. The LED lights up in blue to indicate that the machine is in Copy mode. For details of the copy function, refer to [User's Guide Copy Operations].
5	Keypad	Use this keypad to enter desired number of copies. This keypad is also used to enter fax numbers, mail addresses, and names. For details, refer to P. 6-5.

No.	Name	Description
6	Stop/Reset	Press this key to return the settings to their defaults. This key is also used to stop functions.
7	Start	Press this key to start an operation such as copying, scanning, or faxing. • Lights up blue: This machine is ready to start operating. • Lights up orange: This machine is not ready to start operating. Note – If this indicator lamp lights up orange, check whether any warning or message is displayed on the Message Window.
8	Access	Press this key to perform authentication on the Login screen if user authentication or account track is installed on this machine. Press Access under the login condition to log out. For details, refer to P. 7-2.
9	Data Indicator	Flashes or lights up to indicate the data status on this machine. • Flash in blue: Indicates that data is being sent or received. • Lights up blue: Indicates that data is being saved or processed.
10	Back	Press this key to clear the specified number of copies and entered text. Press to return to the previous screen. Press to cancel the setting that is currently displayed.
11	Select	Press this key to select the setting that is currently displayed.
12	▲/▼	Press this key to move the selection mark up and down when the setting menu is displayed. This key is also used to adjust the number for number input.
13	◀/▶	Press this key to move the selection mark left and right when the setting menu is displayed. Press to move the input position when inputting characters. Press to adjust the level setting.
14	Power key	Press this key to switch this machine to Power Save mode. For details, refer to P. 3-4.
15	ID Copy	Run ID card copy. For details of the copy function, refer to [User's Guide Copy Operations].

No.	Name	Description
16	On hook	Press this key to send and receive transmissions with the receiver on the hook. For details of the fax function, refer to [User's Guide Fax Operations] included in the optional Fax Mount Kit D200FKTM.
17	Redial/Pause	Press this key to recall the last number dialed. This key is also used to insert a pause when a number is dialed. For details of the fax function, refer to [User's Guide Fax Operations] included in the optional Fax Mount Kit D200FKTM.
18	Addressbook	Press this key to display the information registered in the favorite list, speed dial destinations and group dial destinations. For details, refer to [User's Guide Scanner Operations] or [User's Guide Fax Operations] included in the optional Fax Mount Kit D200FKTM.
19	Warning Indicator	Indicates the status of this machine by the lamp color, flashing, or a lamp lighting up. • Flash in orange: Warning • Lights up orange: The machine has stopped.
20	Utility	You can switch to the setting menu screen.

2. Entering characters

Use the Keypad to enter numbers, characters and symbols.

Changing Input Mode

Every time the # key on the Control Panel is pressed, the input mode switches between the alphabet and numbers.

Display	Description
[A...]	Alphabet input mode
[1...]	Number input mode

Key Operation

The characters that can be entered differ depending on the input mode. The characters that can be entered for each input mode are as follows.

Display	[1...] Number input mode	[A...] Alphabet input mode
1	1	.,'?!"1-()@/:;_
2	2	ABC2abc
3	3	DEF3def
4	4	GHI4ghi
5	5	JKL5jkl
6	6	MNO6mno
7	7	PQRS7pqrs
8	8	TUV8tuv
9	9	WXYZ9wxyz
0	0	(space)0
*	#	*+=#%&<>[]{}|^
#		

Note

- When the # key or the * key is pressed on the fax number input screen, # or * appears respectively.
- To erase all entered text, hold down the Back key.
- To delete only part of the entered text, use the ◀ key and ▶ key to move the cursor to the character that you want to delete, and then press the Back key.
- If the same key is to be used to enter two characters in a row, press the ▶ key after selecting the first character.
- To enter a space, press the 0 key once in the alphabet input mode.

3. About the Message Window display

The machine status, error messages etc. can be checked in the Message Window.

Main Screen (Copy Mode)

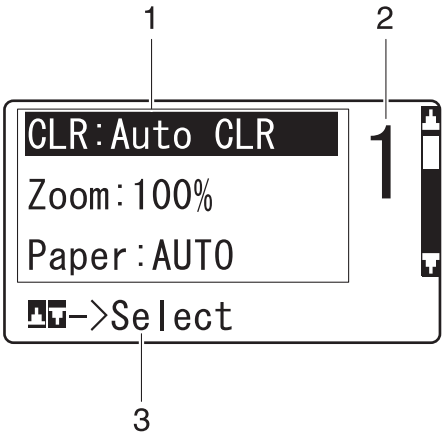

No.	Name	Description
1	Copy settings	Allows the current settings to be checked and the various settings to be changed. For details, refer to [User's Guide Copy Operations].
2	Number of copies	Indicates the number of copies.
3	Status	Depending on the situation, the machine status or an error message may appear.

Main Screen (Scan Mode)

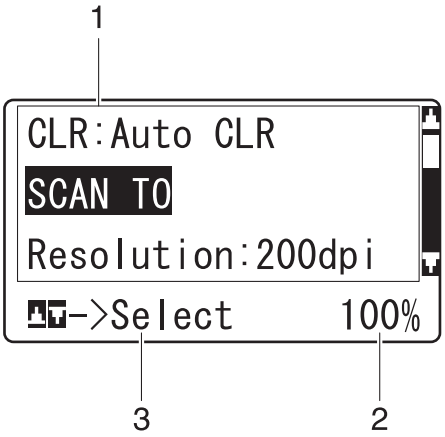

No.	Name	Description
1	Scan settings	Allows the current settings to be checked and the various settings to be changed. For details, refer to [User's Guide Scan Operations].
2	Available memory	Indicates the percentage of memory available.
3	Status	Depending on the situation, the machine status or an error message may appear.

Main Screen (Fax Mode)

Reference

– For details, refer to [User's Guide Fax Operations] included in the optional Fax Mount Kit D200FKTM.

4. REPORT/STATUS Menu

To display the REPORT/STATUS menu, select [REPORT/STATUS] in the main screen, and then press the Select key. From this menu, the total number of pages printed by this machine can be viewed. In addition, the reports can be printed. The REPORT/STATUS menu is structured as shown below.

Note

- To return to the previous screen, press the Back key. To display the main screen, press the Stop/Reset key.

TOTAL PRINT

Item	Description
[TOTAL PRINT:]	This counter shows the total number of pages printed.
[MONO COPY:]	This counter shows the total number of pages copied in black-and-white.
[Full CLR Cp:]	This counter shows the total number of pages copied in full color.
[2 CLR Copy:]	This counter shows the total number of pages copied in 2 colors.
[MONO PRINT:]	This counter shows the total number of pages printed in black-and-white.
[Full CLR Pr:]	This counter shows the total number of pages printed in full color.
[2 CLR Print:]	This counter shows the total number of pages printed in 2 colors.
[Total Scan:]	This counter shows the total number of document pages that were scanned.

Note

- For 1-sided printing or copying, the total number of printed pages is 1. For 2-sided printing or copying, the total number of pages is 2.

REPORT

Prints the settings and machine status.

Item	Description
[Counter List]	Prints the usage status of the machine, e.g. total number of pages copied.
[Check Cnsmbl. List]	Prints the status of consumables (consumption level) in this machine.
[Configuration Page]	Prints a estimate of the percentage of toner remaining and the settings, information and status of this machine.
[PS FONT LIST]	Prints the PostScript font list.
[PCL FONT LIST]	Prints the PCL font list.
[Demo Page]	Prints a test page.

Login Screen

7

Logging in to this machine

If user authentication or account track is installed on this machine, the Login screen appears on the Message Window.

Enter the user or account track name and the password on the Login screen to perform authentication. After the target operation was completed, press the Access key to log out.

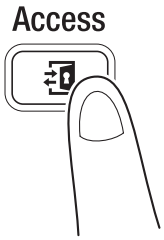

Performing user authentication

Enter the user name and the password, and perform user authentication.

✓ For details on how to configure user authentication settings, refer to Chapter 2 "Configuring the Operating Environment of This Machine" in [User's Guide Applied Functions].

1 Select [USER NAME] by pressing the ▲/▼ key in the login screen, then press the Select key.

→ If Public User Access (unregistered users) is enabled, tap [Public login] to log in to this machine.

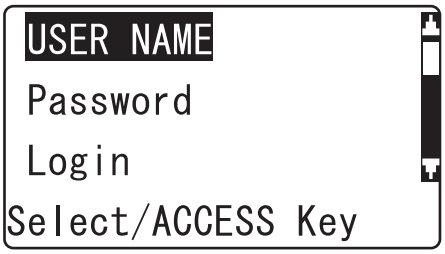

2 Enter the user name, then press the Select key.

3 Select [Password] by pressing the ▲/▼ key, then press the Select key.

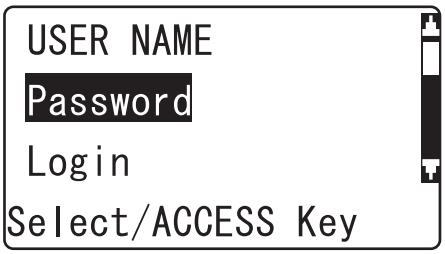

4 Enter the password, then press the Select key.

→ If user authentication and account track are installed without being synchronized, account track is required after this. For details, refer to P. 7-3.

→ If user authentication and account track are synchronized, account track is not required.

5 With the [USER NAME] or [Password] selected, press the Access key to log into the machine. If authentication succeeds, you can log in to this machine.

6 After the target operation was completed, press the Access key to log out.

→ If you do not operate this machine for a certain period of time during login (default: one min.), you will be automatically logged out.

Performing account track

Enter the account name and the password to perform account track.

√ For details on how to configure account track settings, refer to Chapter 2 "Configuring the Operating Environment of This Machine" in [User's Guide Applied Functions].

√ If user authentication and account track are installed without being synchronized, perform user authentication first. To perform user authentication, refer to P. 7-2.

√ If user authentication and account track are synchronized, account track is not required. However, if the account of the user to be authenticated has not been set, account track is then required.

1 Select [Account Name] by pressing the ▲/▼ key in the login screen, then press the Select key.

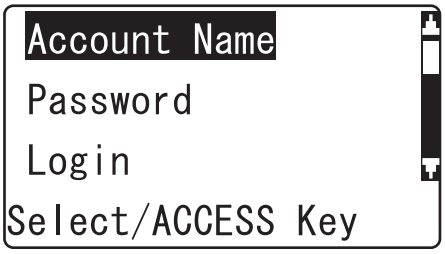

2 Enter the account name, then press the Select key.

3 Select [Password] by pressing the ▲/▼ key, then press the Select key.

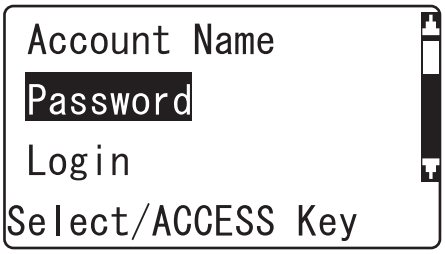

4 Enter the password, then press the Select key.

5 With the [Account Name] or [Password] selected, press the Access key to log into the machine. If authentication succeeds, you can log in to this machine.

6 After the target operation was completed, press the Access key to log out.

→ If you do not operate this machine for a certain period of time during login (default: one min.), you will be automatically logged out.

Direct Input Screen

Machine Model	Notice to the User
• A-grade Machine (Business Broadcasting & Communication Equipment)	This Machine is a Business (A-grade) electromagnetic conformity machine, and the seller and the user should pay attention to this point. The Machine is aimed at being used in the area out of home.
• B-grade Machine (Home Broadcating & Communication Equipment)	This Machine is a Home (B-grade) electromagnetic conformity machine, and is aimed at being mainly used at home, but it can be used in all areas.

※ This Product is applied to the A-grade Machine.

Sindoh

www.sindoh.com